इंटरनेट मानक

Disclosure to Promote the Right To Information

Whereas the Parliament of India has set out to provide a practical regime of right to information for citizens to secure access to information under the control of public authorities, in order to promote transparency and accountability in the working of every public authority, and whereas the attached publication of the Bureau of Indian Standards is of particular interest to the public, particularly disadvantaged communities and those engaged in the pursuit of education and knowledge, the attached public safety standard is made available to promote the timely dissemination of this information in an accurate manner to the public.

"जानने का अधिकार, जीने का अधिकार"
Mazdoor Kisan Shakti Sangathan
"The Right to Information, The Right to Live"

"पुराने को छोड नये के तरफ"
Jawaharlal Nehru
"Step Out From the Old to the New"

IS 5613-1-2 (1985): Code of practice for design, installation and maintenance of overhead power lines, Part 1: Lines upto and including 11 kV, Section 2: Installation and maintenance [ETD 37: Conductors and Accessories for Overhead Lines]

"ज्ञान से एक नये भारत का निर्माण"
Satyanarayan Gangaram Pitroda
"Invent a New India Using Knowledge"

RIGHT TO INFORMATION

Made Available By Public.Resource.Org

"ज्ञान एक ऐसा खजाना है जो कभी चुराया नहीं जा सकता है"
Bhartṛhari—Nītiśatakam
"Knowledge is such a treasure which cannot be stolen"

BLANK PAGE

BRUTUM FULMEN

IGNORANTIA JURIS NON EXCUSAT

PROTECTED BY COPYRIGHT

IS : 5613 (Part 1/Sec 2) - 1985
(Reaffirmed 2002)

Indian Standard

CODE OF PRACTICE FOR DESIGN, INSTALLATION AND MAINTENANCE OF OVERHEAD POWER LINES

PART 1 LINES UP TO AND INCLUDING 11 kV

Section 2 Installation and Maintenance

(First Revision)

First Reprint APRIL 1990

UDC 621·315·17·027·6 : 006·76

© *Copyright* 1986

BUREAU OF INDIAN STANDARDS
MANAK BHAVAN, 9 BAHADUR SHAH ZAFAR MARG
NEW DELHI 110002

Gr 7 *March* 1986

Indian Standard

CODE OF PRACTICE FOR DESIGN, INSTALLATION AND MAINTENANCE OF OVERHEAD POWER LINES

PART 1 LINES UP TO AND INCLUDING 11 kV

Section 2 Installation and Maintenance

(First Revision)

Conductors and Accessories for Overhead Lines Sectional Committee, ETDC 60

Chairman	*Representing*
SHRI R. D. JAIN	Rural Electrification Corporation Ltd, New Delhi
Members	
SHRI G. L. DUA (*Alternate* to Shri R. D. Jain	
ADDITIONAL GENERAL MANAGER (IT)	Indian Posts & Telegraphs Department, New Delhi
DIVISIONAL ENGINEER (TALE) C/P (*Alternate*)	
SHRI M. K. AHUJA	Delhi Electric Supply Undertaking, New Delhi
SHRI V. P. ANAND	Electrical Manufacturing Co Ltd, Calcutta
SHRI S. C. MALHOTRA (*Alternate*)	
SHRI R. S. ARORA	Directorate General of Supplies and Disposals, New Delhi
SHRI J. S. PASSI (*Alternate*)	
SHRI R. T. CHARI	Tag Corporation, Madras
SHRI A. ARUNKUMAR (*Alternate*)	
SHRI R. S. CHAWLA	Industrial Fasteners & Gujarat Pvt Ltd, Vadodara
SHRI D. P. MEHD (*Alternate*)	
CHIEF ENGINEER (TR & PLANNING)	Maharashtra State Electricity Board, Bombay
SUPTG ENGINEER (400 kV) (*Alternate* I)	
SUPTG ENGINEER (200 kV) (*Alternate* II)	
SHRI M. R. DOCTOR	Special Steels Ltd, Bangalore
SHRI V. C. TRICKUR (*Alternate*)	

(*Continued on page 2*)

© *Copyright* 1986
BUREAU OF INDIAN STANDARDS
This Publication is protected under the *Indian Copyright Act* (XIV of 1957) and reproduction in whole or in part by any means except with written permission of the publisher shall be deemed to be an infringement of copyright under the said Act.

(*Continued from page* 1)

Members	*Representing*
DIRECTOR	Central Power Research Institute, Bangalore
SHRI T. V. GOPALAN (*Alternate*)	
DIRECTOR (TRANSMISSION)	Central Electricity Authority (Transmission Directorate), New Delhi
DEPUTY DIRECTOR (TRANSMISSION) (*Alternate*)	
DIRECTOR (TI), RDSO	Ministry of Railways
JOINT DIRECTOR (TI)-I (*Alternate*)	
SHRI M. K. JUNJHUNWALA	Cable and Conductor Manufacturers Association of India, New Delhi
SHRI T. S. PADMANABHAN (*Alternate*)	
SHRI H. C. KAUSHIK	Haryana State Electricity Board, Chandigarh
SHRI K. B. MATHUR	U. P. State Electricity Board, Lucknow
SHRI V. B. SINGH (*Alternate*)	
SHRI B. MUKHOPADHYAY	National Test House, Calcutta
SHRI U. S VERMA (*Alternate*)	
SHRI N. D. PARIKH	KEC International Ltd, Bombay
SHRI S. D. DAND (*Alternate*)	
SHRI C. K. RAGUNATH	Tamil Nadu Electricity Board, Madras
SHRI M. U. K. MENON (*Alternate*)	
SHRI A. K. RAMACHANDRA	National Thermal Power Corporation Ltd, New Delhi
SHRI S. S. RAO (*Alternate*)	
SHRI R. P. SACHDEVA	Bhakra Beas Management Board, Chandigarh
SHRI H. S. CHOPRA (*Alternate*)	
SHRI S. N. SENGUPTA	National Insulated Cable Co of India Ltd, Calcutta
SHRI B. GANGULY (*Alternate*)	
SHRI V. K. SHARMA	National Hydro Electric Power Corporation Ltd, New Delhi
SHRI MAHENDRA KUMAR (*Alternate*)	
SHRI R. D. SHETH	Electro-Metal Industries Bombay
SHRI G. J. DEVASSYKUTTY (*Alternate*)	
SHRI T. SINGH	Indian Cable Co Ltd, Calcutta
SHRI S. K. GUPTA (*Alternate*)	
SHRI D. SIVASUBRAMANIAM	Aluminium Industries Ltd, Kundra
SHRI K. M. JACOB (*Alternate*)	
PROF M. VENUGOPAL	Indian Institute of Technology, Madras
PROF Y. NARAYANA RAO (*Alternate*)	
SHRI WADHWA	Tata Hydro-Electric Supply Co Ltd, Bombay
SHRI P. P. BHISEY (*Alternate*)	
SHRI S. P. SACHDEV, Director (Elec tech)	Director General, ISI (*Ex-officio Member*)

Secretary

SHRI SUKH BIR SINGH

Deputy Director (Elec tech), ISI

Indian Standard

CODE OF PRACTICE FOR DESIGN, INSTALLATION AND MAINTENANCE OF OVERHEAD POWER LINES

PART 1 LINES UP TO AND INCLUDING 11 kV

Section 2 Installation and Maintenance

(First Revision)

0. FOREWORD

0.1 This Indian Standard (First Revision) was adopted by the Indian Standards Institution on 22 January 1985, after the draft finalized by the Conductors and Accessories for Overhead Lines Sectional Committee had been approved by the Electrotechnical Division Council.

0.2 The design installation and maintenance practice of overhead power lines varies widely from state to state and organisation to organisation. This variation leads to uneconomic designs and higher installation and maintenance cost. The necessity was, therefore, felt to prepare a standard on this subject which would result in unification of designs of overhead lines and also in saving of cost.

0.3 This standard was first published in 1971. The revision of this standard has been undertaken to include the developments that have taken place since the last publication of this standard.

0.4 This standard is being prepared in the following three parts:

Part 1 Lines up to and including 11 kV;
Part 2 Lines above 11 kV and up to and including 220 kV; and
Part 3 Lines above 220 kV.

Each part has been further divided in two sections. Section 1 of each part covers design aspects while Section 2 covers installation and maintenance of overhead power lines.

0.5 In the preparation of this standard considerable assistance have been derived from Rural Line Standards and Construction Manuals prepared by Rural Electrification Corporation Ltd, New Delhi.

0.6 For the purpose of deciding whether a particular requirement of this standard is complied with, the final value, observed or calculated, expressing the result of a test, shall be rounded off in accordance with IS : 2-1960*. The number of significant places retained in the rounded off value should be the same as that of the specified value in this standard.

---

1. SCOPE

1.1 This code (Part 1/Sec 2) covers installation and maintenance of overhead power lines up to and including 11 kV.

1.2 This code does not cover installation and maintenance of service lines.

2. TERMINOLOGY

2.1 For the purpose of this code, the definitions given in IS : 1885 (Part 32) - 1971† shall apply.

3. EXCHANGE OF INFORMATION

3.1 General — Before ordering for poles, insulators, conductors, etc, for use in overhead power lines, complete information should be worked out by the engineers responsible for their procurement, installation, operation and maintenance, so that the material is procured to suit the duties, locations, and installation conditions under which the lines will operate.

3.2 Transport Facilities — Information about transportation particularly for poles and rails should be obtained from rail and road authorities where required.

4. GENERAL REQUIREMENTS

4.1 Materials and Appliances — All materials, fittings, appliances, etc, used in the installation shall conform to relevant Indian Standard specifications wherever they exist. In cases where there is no Indian Standard available, the items shall conform to specifications approved by a competent authority.

4.2 Compliance with Indian Electricity Rules — All electrical instalations shall comply with the requirements of the Indian Electricity Act and Rules made thereunder and with any other regulations that may be

---

*Rules for rounding off numerical values (*revised*).

†Electrotechnical vocabulary: Part 32 Cables, conductors and accessories for electricity supply.

applicable. The Rules No. 29, 74 to 93 of Indian Electricity Rules, 1956 are particularly applicable.

4.2.1 It is recommended that local authorities concerned in the matter of layout and installation of overhead power lines (for example, crossing the town development area, running the line near the aerodrome, etc) should be consulted.

4.3 The posts and telegraphs authorities or railway authorities should also be consulted particularly where a power line has to cross a telegraph line or a railway line respectively. Reference should be made to the relevant provisions of regulations concerning this, made by the Power Telecommunication Co-ordination Committee and regulations formulated by the railway authorities.

4.4 The electrical installation shall be carried out, only by authorized persons, competent to undertake such work, under the rules and regulations, that may be in force in different States.

4.5 Preparation for the installation of overhead lines should be done well in advance of the actual commencement of the work. The route of the line should be accurately laid out on the drawing plan, poles and accessories like insulators should be distributed along the route of the line, and site offices should be built wherever necessary and other accessories required in the installation of the line should be arranged.

5. FOUNDATION

5.1 General — A hole should be drilled in the ground with the use of earth-augers. However, if earth-augers are not available a dog pit of the size 1·2 × 0·6 m should be made in the direction of the line. The depth of the pit shall be in accordance with the length of the pole to be planted in the ground as given in respective Indian Standards.

NOTE — Details of various types of poles and their length and depth of planting is given in IS : 785-1964*, IS : 876-1970†, IS : 1678-1978‡ and IS : 2713 (Part 1 to 3) 1981§.

5.1.1 All the poles shall be so positioned in the foundations that the bigger section modulus of the pole is always transverse to the length of the line.

---

*Specification for reinforced concrete poles for overhead power and telecommunication lines (*revised*).

†Specification for wood poles for overhead power and telecommunication lines (*revised*).

‡Specification for prestressed concrete poles for overhead power, traction and telecommunication lines (*first revision*).

§Specification for tubular steel poles for overhead power lines (*second revision*).

5.2 Wood Poles — Wood poles shall not be concreted or provided with concrete collar (muff) at the ground level. Due to change in weather, wood pole contracts and leaves crevises at the ground level if a concrete collar is provided. The termites, white ants, etc, make their home in these crevises and destroy the pole. The portion of wood poles below ground should be painted with bitumen to avoid deterioration. After a wood pole is erected, the pit should be partially filled with brick-bats and rammed well with a crowbar. Thereafter earth filling should be done with simultaneous ramming. Baulk as shown in Fig. 1 or other means, shall be provided where the ground or local conditions call for additional strength in the foundations.

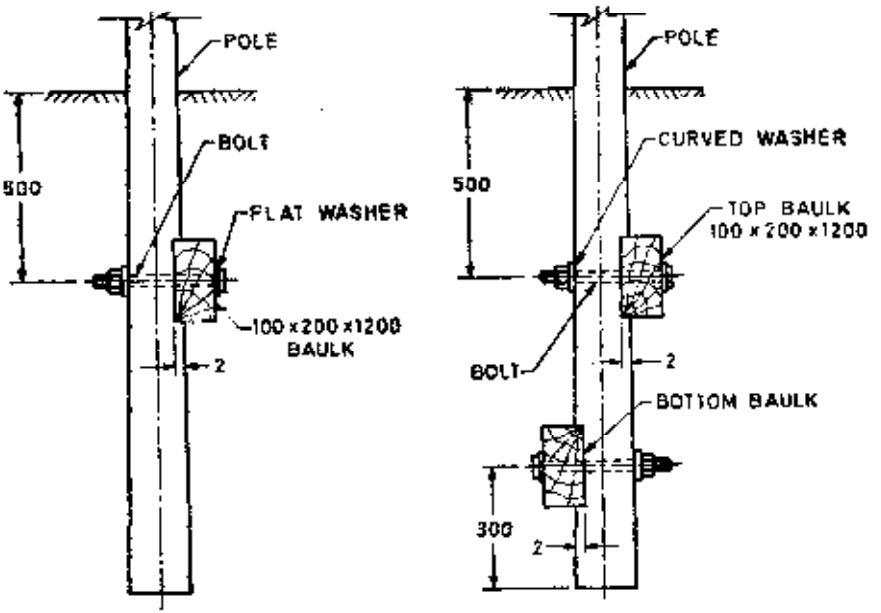

All dimensions in millimetres.

1A Foundation Details for Ordinary Soil

1B Foundations Details for Loos Soil

NOTE 1 — If there is a slight deviation in the line, the top Baulk should be on the inside.

NOTE 2 — Figure is not to scale.

FIG. 1 DETAILS OF FOUNDATION WITH BAULK

5.3 Steel Tubular Poles, Rolled Steel Joists and Rails — A suitable pad of cement concrete, stone or steel shall be provided at the bottom of the pit, before the metallic pole is erected. Where metal works are likely to get corroded (points where the pole emerges out of the ground), a cement concrete muff, 20 cm above and 20 cm below the ground with sloping top shall be provided.

5.4 Pre-stressed and Reinforced Concrete Poles — RCC poles generally have larger cross-section than the PCC poles and, therefore, the base plates or muffings are usually not provided for these types of poles. However, for PCC poles, a base plate (40 × 40 × 7 cm concrete block) shall be provided. Cement concrete muff with sloping top may also be provided, 20 cm above and 20 cm below the ground level, when the ground or local conditions call for the same.

5.5 After the first rainy season, inspection shall be made of the foundation and the pits shall be back-filled with earth and rammed well wherever the first filling has sunk due to rains.

6. ERECTION OF POLES

6.1 Poles are normally buried directly in the ground. Heavier poles are generally erected by the derrick pole method while lighter poles are normally erected by the dead-man's method. The details of derrick poles and dead-man's methods are given in **6.2** and **6.3** respectively.

6.2 The pole is laid out along the line route in such a way that the bottom of the pole is above the pit and is touching the skid board on the opposite side inside the pit. A derrick pole supported by a rope is erected vertically so that its leg is near the bottom of the pole. Two side pulling ropes (rope 1 in Fig. 2) are connected near the top of the pole, so that the pole does not bend laterally during erection. Another rope (rope 2 in Fig. 2) is tied at the top of the support and passes over the derrick pole over a pulley and is pulled manually in the direction shown in Fig. 2. A rope 3 is tied at the top of the pole and is pulled when the pole has risen about 45° from the ground level. To raise the support in position, rope 2 is pulled and the pole slides down the pit on the slid board. Finally rope 3 is also pulled till the pole stands vertical. Rope 1 is all the time kept tight. The pole is held vertical by means of ropes 1, 3 and 4. When the pole reaches the vertical position, it is plumbed and adjusted if necessary by means of the various ropes so that the pole comes in complete alignment and is in plumb. The pit is back filled in layers taking care to ram the earth in one layer at a time. In loose soils special foundations may be necessary (*see* Fig. 1B). Wherever necessary baulks may be used to give additional support to the poles.

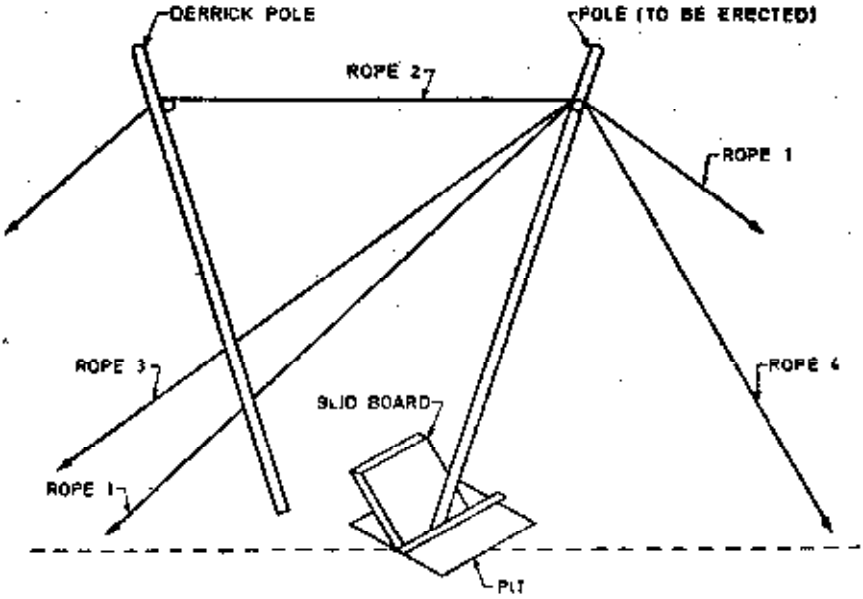

FIG. 2 ERECTION OF WOODEN POLES BY THE DERRICK POLE METHOD

6.3 Dead-Man's Method — The pole is laid out along the line route. A skid board is placed vertically at the back of the hole and the pole is moved forward till it rests against the board. The pole is then raised manually and is supported on the dead-man. Guy ropes are attached to the pole at a distance more than half the length of the pole from the butt. The pole is raised and the dead-man is moved forward until a pole-spike or a ladder approximately 3 m in height can be put in. The ladder is used to take the first lift and the dead-man is moved forward. The ladder is moved forward and another ladder approximately 4 m in height or a pole spike is put in. The dead-man is now removed and the side guys are tightened to prevent the pole from swinging. Another ladder of approximately 5 m height is introduced and lifts are taken alternatively with each ladder until the pole reaches an angle approximately 70° from the horizontal. The back and side guys are slackened. The front guy is tightened and the back guy is slackened till the pole is pushed up to vertical position. The 5 m ladder will be required only if the pole height is more than about 12 m. The pole is then carefully plumbed with the help of guy rope and the butt of the pole is lined in with the poles already erected and the next to be erected. The pit is then filled in with soil and rammed. Special baulk may be used to give additional support to the poles.

6.4 If required cross arms and insulators may be attached to the poles before they are erected.

6.5 Erection procedure for 'H' type poles is similar to the one described in **6.2** and **6.3** except that two pits are made in the ground and two derricks or two sets of ladders, as necessary, are required.

7. POLE FITTINGS AND CROSS ARMS

7.1 Lines up to 650 Volts

7.1.1 The phase conductors in horizontal configuration should be run on pin or shackle insulators. The neutral conductors may be run on reel insulators. The earth wire may be run on cast iron reel mounted directly on the cross arm.

7.1.2 For vertical configuration, the insulators may be fixed on the pole by the use of D-type or other suitable clamps. The earth wire in this case may be run directly on a D-clamp.

7.1.3 Typical methods of fixing the cross arms and insulators are given in Fig. 3 and 4.

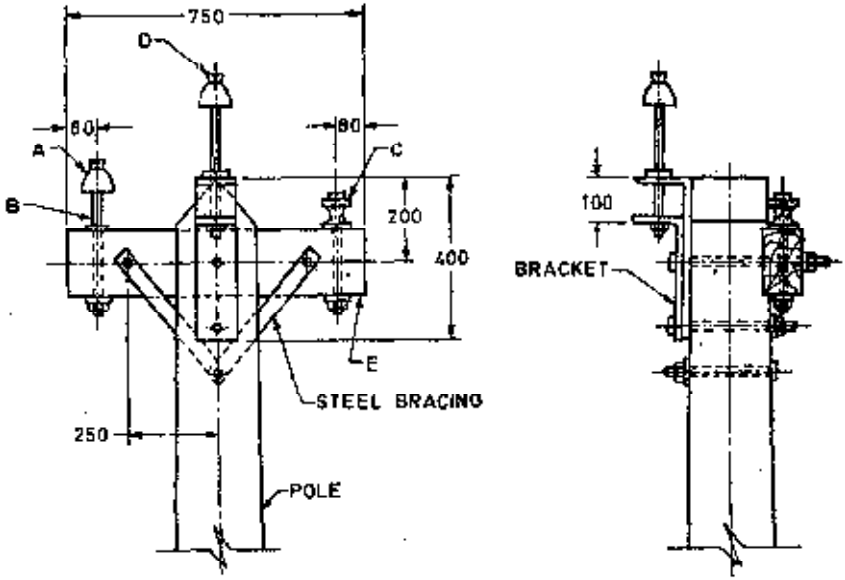

3A Low Voltage Single-Phase Line with one Extra Phase for Street Lighting

FIG. 3 TYPICAL METHODS OF FIXING CROSS ARMS AND INSULATORS IN HORIZONTAL FORMATION FOR LOW AND MEDIUM VOLTAGE LINES — *Contd.*

7.2 Lines Beyond 650 V and up to 11 kV

7.2.1 These lines are usually arranged in delta formation generally by placing the top conductor on the top of the pole by fixing an insulator with a bracket clamp and by placing the bottom conductors on a suitable cross arm.

7.2.2 In situations where birds are found in large numbers, such as, refuse dumping grounds, 'V' or 'U' type cross arms made of mild steel sections should be used. Bird guards may also be provided in such locations.

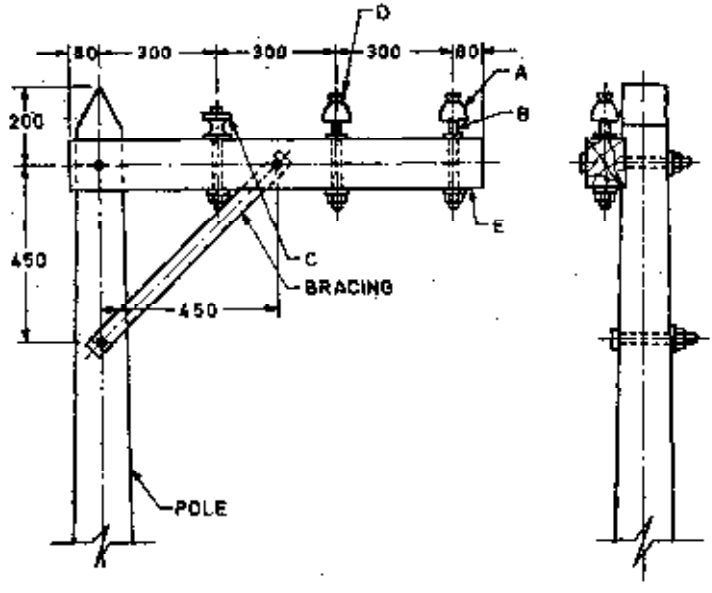

3B Low Voltage Single-Phase Line with One E... Phase for Street Lighting for Narrow Streets

FIG. 3 TYPICAL METHODS OF FIXING CROSS ARMS AND INSULATORS I HORIZONTAL FORMATION FOR LOW AND MEDIUM VOLTAGE LINES—*Conti*

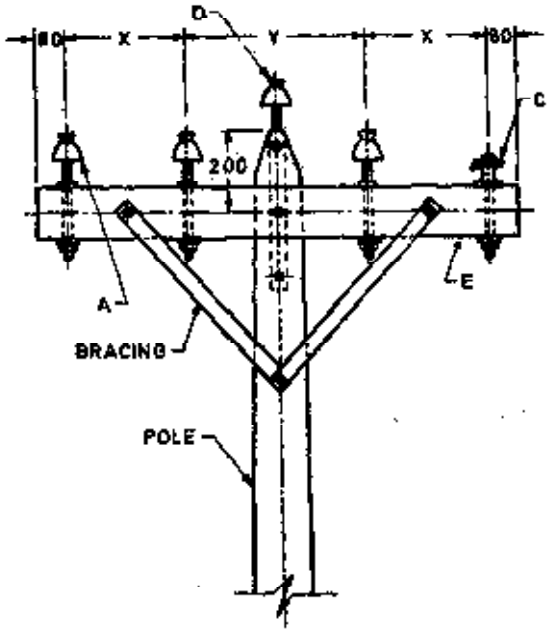

3C -Medium Voltage Three-Phase Line

A = Pin type insulator

B = Pin cross arm type (supply phase)

C = Reel insulator (neutral)

D = Street light phase

E = Wood cross arm

Sag in cm	Horizontal Spacing X	Spacing Y
Up to 75	30	45
76 to 120	45	45
121 to 145	60	60

NOTE 1 — All metal parts and neutral to be earthed of each pole.
NOTE 2 — Figures are not to scale.

FIG. 3 TYPICAL METHODS OF FIXING CROSS ARMS AND INSULATORS IN HORIZONTAL FORMATION FOR LOW AND MEDIUM VOLTAGE LINES

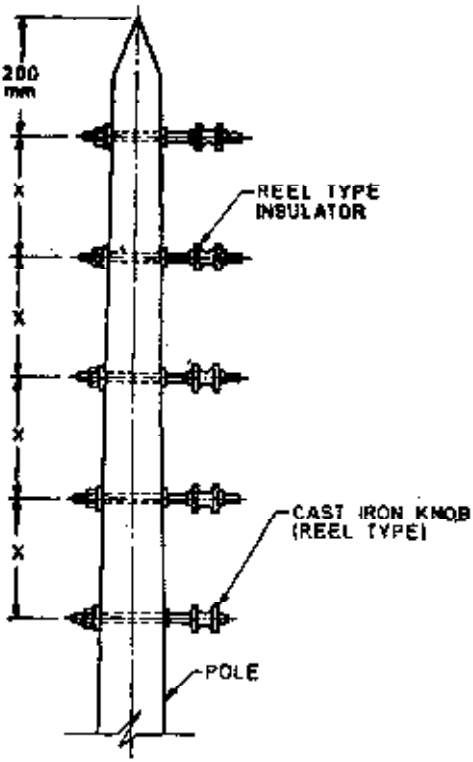

4A Medium Voltage Three-Phase Line

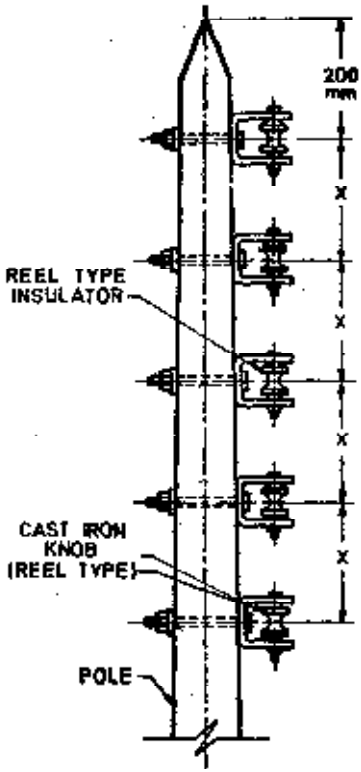

4B Medium Voltage Three-Phase Line

Spacing 'X' cm	Ruling Span
20	Up to 70 m
30	71 to 100 m

Note – All metal parts and neutral to be earthed at each pole.

Fig. 4 Typical Methods of Fixing Insulators in Vertical Configuration for Medium Voltage Lines

7.2.3 Typical methods of fixing the cross arms and insulators are given in Fig. 5 and 6.

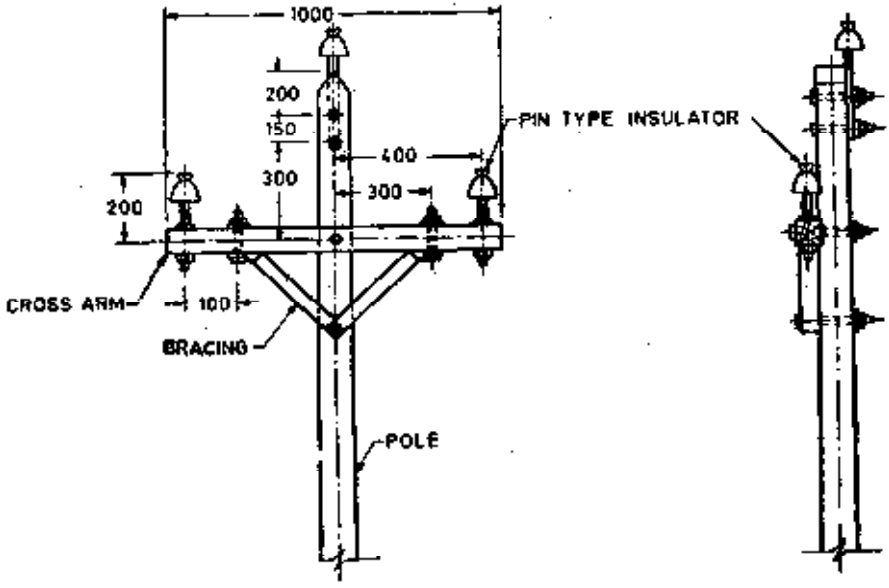

5A High Voltage Three-Phase Line (for Spans to 120 m)

FIG. 5 TYPICAL METHODS OF FIXING CROSS ARMS AND INSULATORS IN HORIZONTAL CONFIGURATION FOR HIGH VOLTAGE LINES — *Contd.*

7.3 A typical method of installing both high voltage and medium voltage lines on a common pole is given in Fig. 7.

8. INSULATORS

8.0 The following types of insulators are generally used on overhead power lines:

a) Pin insulators (*see* IS : 1445-1977* and IS : 731-1971†),

b) Disc insulators (for high voltage lines) (*see* IS : 3188-1980‡ and IS : 731-1971†).

---

*Specification for porcelain insulators for overhead power lines (below 1 000 V) (*second revision*).

†Specification for porcelain insulators for overhead power lines with a nominal voltage greater than 1 000 V (*second revision*).

‡Characteristics of string insulators units (*first revision*).

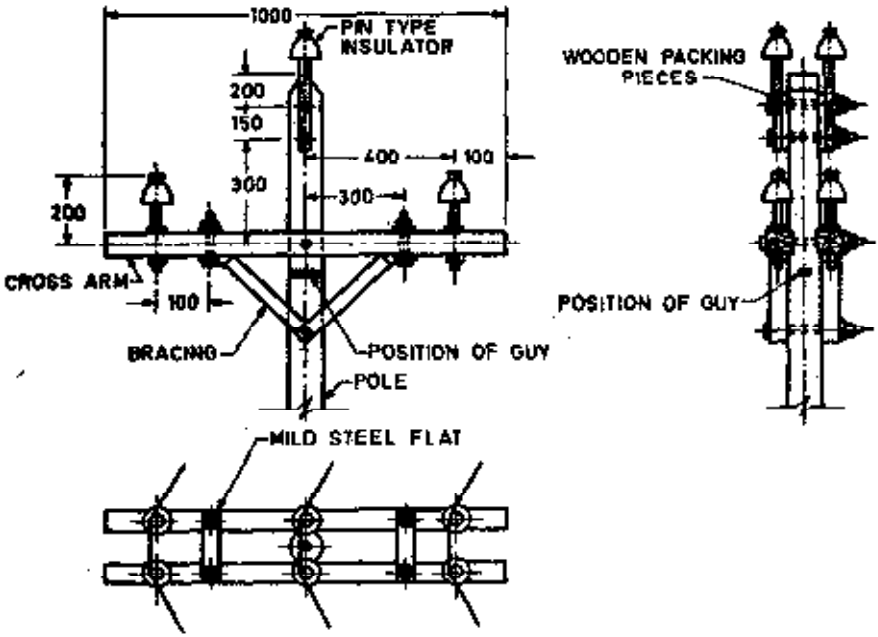

All dimensions in millimetres.

NOTE 1 — Configuration is suitable for sags tip to 1400 mm.
NOTE 2 — Figure is not to scale.

5B High Voltage Three-Phase Lines (for Spans up to 120 m) with a Bend of 10° to 30° Angle

FIG. 5 TYPICAL METHODS OF FIXING CROSS ARMS AND INSULATORS IN HORIZONTAL CONFIGURATION FOR HIGH VOLTAGE LINES — *Contd.*

c) Shackle insulators (for low and medium voltage lines) (*see* IS : 1445-1977*), and

d) Stay insulators (or egg type insulators) for stay and guy wires (*see* IS : 5300-1969†).

*Specification for porcelain insulators for overhead power lines with a nominal voltage up to and including 1 000 V (*second revision*).

†Specification for porcelain guy strain insulators.

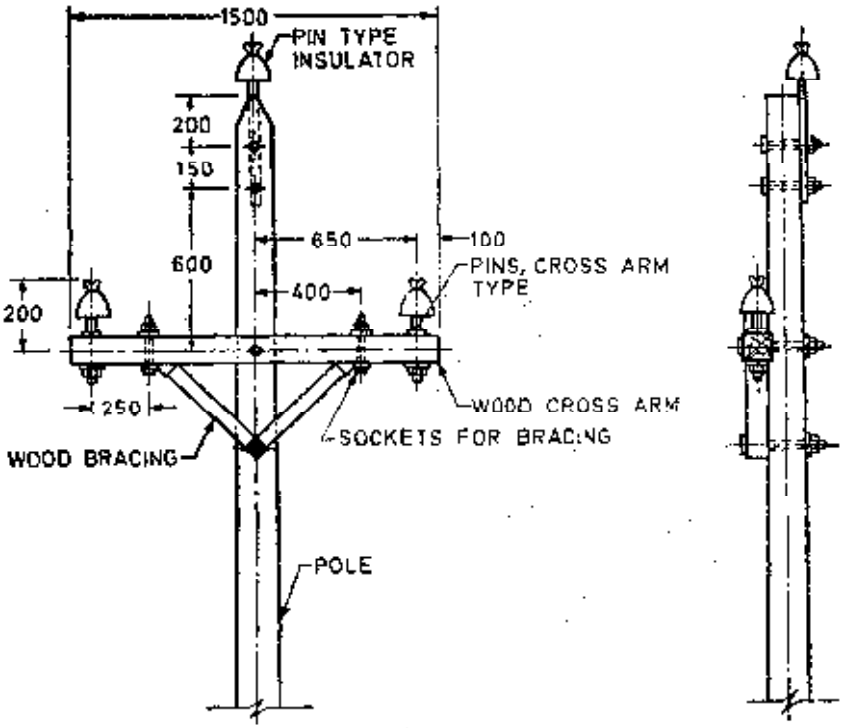

All dimensions in millimetres.

NOTE 1 -- Configuration is suitable for sags more than 140 cm and up to 225 cm.

NOTE 2 -- For lines with a bend of 10° to 30° angle, the arrangement should be in accordance with Fig. 5B but with the dimensions as given above.

NOTE 3 — Figure is not to scale.

5C High Voltage Three-Phase Lines (for Spans from 120 m to 160 m)

FIG. 5 TYPICAL METHODS OF FIXING CROSS ARMS AND INSULATORS IN HORIZONTAL CONFIGURATION FOR HIGH VOLTAGE LINES

8.1 Fixing of Insulators — The insulators should be attached to the poles directly with the help of 'D' type or other suitable clamps in case of vertical configuration of conductors or be attached to the cross arms with the help of pins in case of horizontal configuration.

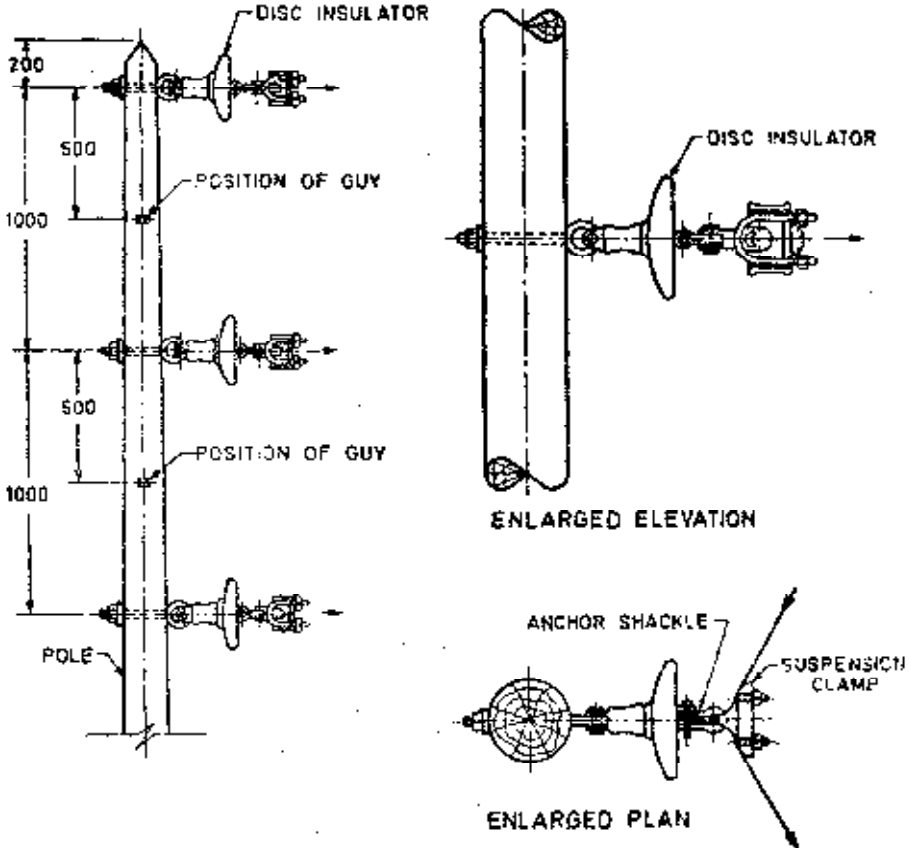

All dimensions in millimetres.

Note — Figure is not to scale.

FIG. 6 A TYPICAL METHOD OF FIXING INSULATORS IN VERTICAL CONFIGURATION FOR HIGH VOLTAGE LINES WITH A BEND OF 30° TO 60° ANGLE

8.2 Pin insulators and recommended for use on straight runs and up to maximum of 10° deviation. The disc insulators are intended for use a pole positions having more than 30° angle or for dead ending of 11 kV lines. For lines having a bend of 10° to 30°, either double cross arms or disc insulators should be used for HT lines up to 11 kV. For low and medium voltage lines, shackle insulators should be used.

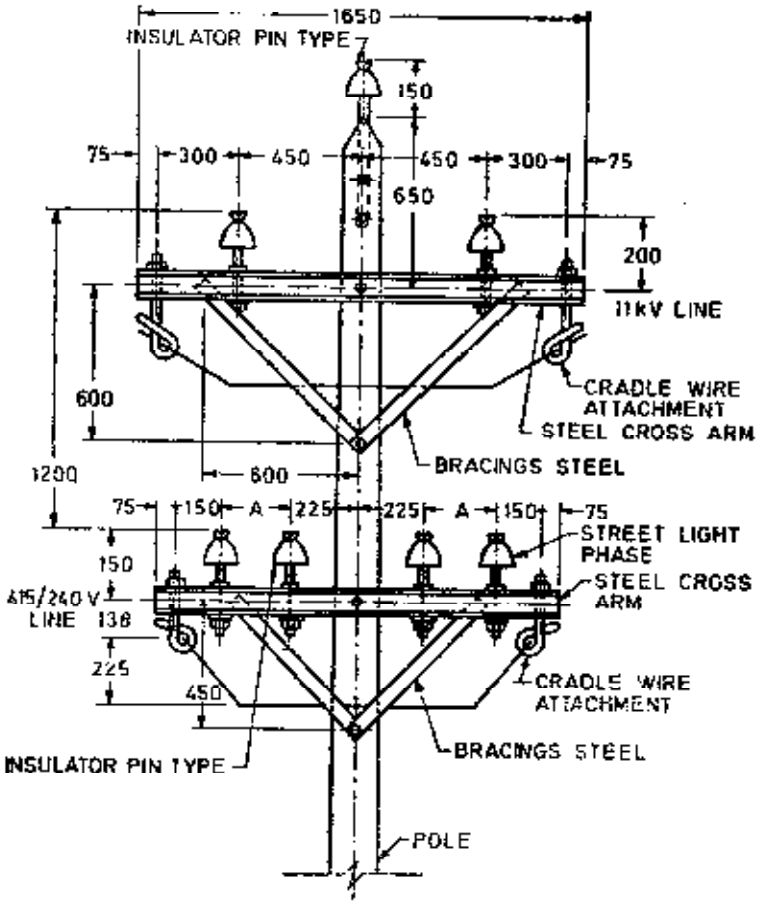

All dimensions in millimetres.

NOTE 1 — Maximum span to be limited to 70 m in accordance with Rule No. 85 of Indian Electricity Rules, 1956.

NOTE 2 — For Dimension 'A' refer Fig. '3C'.

NOTE 3 — Figure is not to scale.

7A Medium Voltage Line in Horizontal Configuration

FIG. 7 A TYPICAL METHOD OF INSTALLING BOTH HIGH VOLTAGE AND MEDIUM VOLTAGE LINES ON ONE POLE — *Contd.*

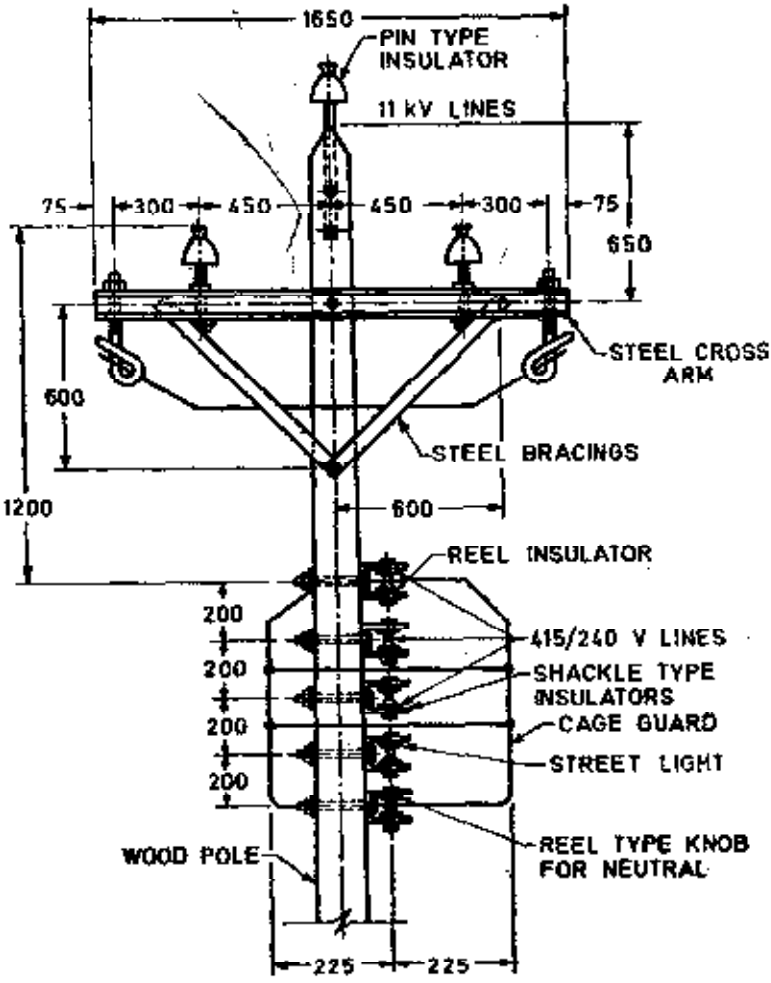

All dimensions in millimetres.

NOTE 1 — Maximum to be limited to 70 m in accordance with Rule No. 85 of Indian Electricity Rules, 1956.

NOTE 2 — Figure is not to scale.

7B Medium Voltage Line in Vertical Configuration

FIG. 7 TYPICAL METHOD OF INSTALLING BOTH HIGH VOLTAGE AND MEDIUM VOLTAGE LINES ON ONE POLE

8.3 When insulators are assembled on the cross arms the porcelain should be inspected for breakage, chipped spots, cracks, scratches and bare unglazed areas. The fittings should also be inspected for cracks, damaged galvanized coating, etc. Parts which cannot be remedied should be replaced.

9. STAYS AND STAYING ARRANGEMENT

9.1 General — Overhead lines supports at angles and terminal positions should be well stayed with stay wire, rod, etc. The angle between the pole and the wire should be about 45° and in no case should be less than 30°. If the site conditions are such that an angle or more than 30° between the pole and the stay wire cannot be obtained, special stays such as, foot stay, flying stay or struts may be used.

9.2 Stay Wire Rods and Plates

9.2.1 *Stay Wires* — Hard drawn galvanized steel wires should be used as stay wires. The tensile strength of these wires shall not be less than 70 kgf/mm². Only standard wires should be used for staying purpose.

9.2.2 *Stay Rods* — Mild steel rods should be used for stay rods. The tensile strength of these rods shall not be less than 42 kgf/mm².

9.2.3 *Stay Anchoring* — Stays should be anchored either by providing base plates of suitable dimensions or by providing angle iron or rail anchors of suitable dimensions and lengths.

9.3 Fixing of Stay Wires and Rods — Stay wires and rods should be connected to the pole with a porcelain guy insulator. Wooden insulators should not be used. Suitable clamps should be used to connect stay wires and rods to its anchor. For low and medium voltage lines a porcelain guy insulator should be inserted in the stay wire at a height of 3 m vertically above the ground level. For high voltage lines, however, the stays may be directly anchored.

9.4 Setting of Stays — The inclination of stay relative to the ground is roughly determined before making the hole for excavation. This enables the position of the stay hole to be fixed so that when the stay is set, the stay rod will have the correct inclination and will come out of the ground at the correct distance from the pole. The stay rods should be securely fixed to the ground by means of a suitable anchor.

10. INSTALLATION OF CONDUCTORS

10.1 Paying off the Conductors — In loading, transportation and unloading conductor drums should be protected against injury. The conductor drums should never be dropped and may be rolled only as indicated by the arrow on the drum side. The drums should be distributed along the route at distance approximately equal to the length of the conductor wound on the drum. The conductors should be run out along the route of the line. As the conductor is payed out, it is passed through gloved hands and examined for defects and damage by feel. When a defect is found, paying out is discontinued and the faulty section is either cut out or repaired. Conductors should not rub against the ground while being pulled as they are likely to get damaged. The conductor should be run out by putting it over roller blocks.

10.2 After paying off the conductor is placed on poles. The conductor should be pulled tight to remove excess slack. To avoid friction while the conductors is being pulled it should be kept on free running shackles or blocks mounted on the poles. It should further be pulled so as to bring the sag to required value. Sagging should be done in sections from one tension point in the line to the other. However, if no tension point comes automatically in the line for a distance of 3 km, one such point should be made either by using a disc insulator or by dead ending the line, whichever is applicable. While sagging the conductor tension in it should be kept uniform throughout the length of the section being sagged.

10.3 Clearances — The clearances shall be in accordance with the Indian Electricity Rules, 1956.

10.4 Attachment of Conductors with Insulators — The insulators should be bound with the line conductors with the help of copper binding wire in case of copper conductors, galvanized iron binding wire for galvanized iron conductors and aluminium binding wire or tape for aluminium and steel-inforced aluminium conductors (ACSR). The size of the binding wire shall not be less than 2 mm^2.

10.5 Conductors of Different Voltages on Same Supports — Where conductors forming parts of systems at different voltages are erected on the same supports, adequate clearance and guarding shall be provided to guard against the danger to lineman and others from the lower voltage system being charged above its normal working voltage by leakage from or contact with the higher voltage system. The clearance between the bottom most conductor of the system placed at the top and the top most conductor of the other system should not be less than 1·2 m.

11. JUMPERS

11.1 Jumpers from dead end points on one side of the pole to the dead end side on the other wide of the pole should be made with conductor of same meterial and current carrying capacity as that of the line conductor. The jumpers should be fixed with the line conductor with a suitable clamp. If the material of the jumper wire is different from that of the line conductor, suitable bimetallic clamps should be used. If copper and aluminium bimetallic clamps are to be used, it should be ensured that the aluminium conductor is situated above the copper conductor so that no copper contaminated water comes in contact with aluminium.

11.2 For high voltage lines the jumpers should be so arranged that there is minimum clearance of 0·3 m under maximum deflection condition due to wind between the live jumpers and other metallic parts. This may involve erection of insulators and dead weights specially for fixing the jumpers.

11.3 Tee-Off — The tee-off from a line should be done only on a pole and not in between any span. The connection from the main line to the feed line may be made in the same way as for jumpers.

11.3.1 Suitable parallel-groove clamps may be used for tappings from main lines of heavier cross-section to tee-off lines of lighter cross-section.

12. ROAD CROSSINGS

12.1 The maximum interval between poles, when the line has to cross a road, shall be in accordance with the requirements laid in the Indian Electricity Rules, 1956.

12.2 In some cases it is found that even if one line breaks and falls to the ground, the circuit fuse will not blow due to the high resistance involved in the circuit. To ensure blowing off of the fuse and to make the line electrically harmless in case the line breakes and falls on the ground, it is recommended to provide protective guarding as shown in Fig. 8A and 8B.

13. RAILWAY CROSSINGS

13.1 Crossing of electric power lines and railway tracks shall be governed in accordance with regulations laid down by the Indian Railways. All crossings up to and including 11 kV shall be by underground cables, except in very exceptional cases.

13.2 The span at the crossing should be kept down to a minimum in order to avoid excessive height of poles and specially-reinforced concrete foundation.

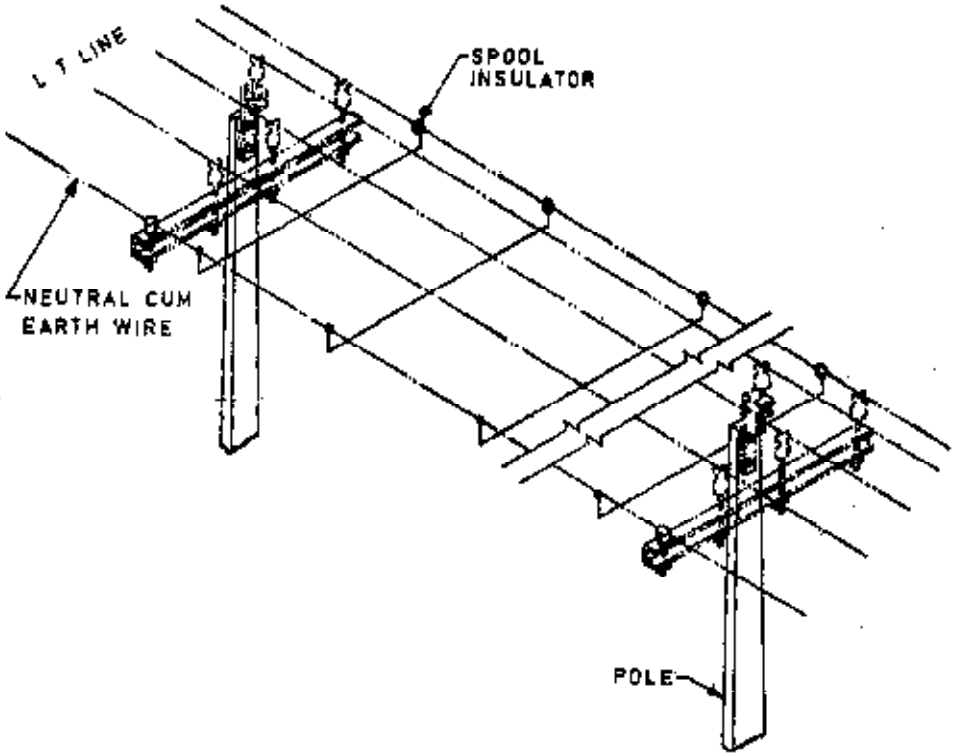

8A Horizontal Formation

FIG. 8 PROTECTIVE GUARDING ARRANGEMENTS -- *Contd.*

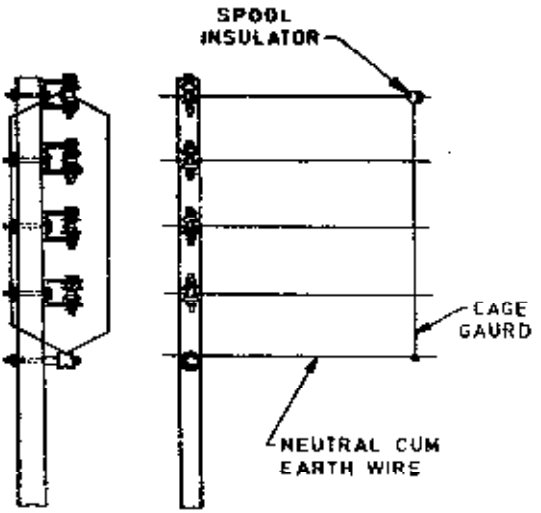

8B Vertical Formation

FIG. 8 PROTECTIVE GUARDING ARRANGEMENTS

13.3 The approval of the railway authorities shall be obtained before any crossing is commenced and before any works are taken. Notice shall be given to the railway authorities at least 7 days before any crossing is put into service for the first time.

14. CROSSING OF POWER LINES AND TELECOMMUNICATION LINES

14.1 General — For the safety of telecommunication lines at locations where the overhead power line may be crossing over the same, the recommendations laid down in the code of practice of the Power and Telecommunication Co-ordination Committee shall be followed. Reference is also invited to Rule 87 of Indian Electricity Rules, 1956. Briefly the methods to be adopted for protection of telephone and telegraph line from contact with power line can be classified under following two groups:

a) Low and medium voltage lines, and

b) High voltage lines up to and including 11 kV.

14.2 Crossing of Low Voltage Distribution Line and Telecommunication Lines -- A continuous split neutral earth guard has been provided in the past and may be required occasionally in future, where for any definite reason, the cage type of guarding can not be adopted. The split neutral construction will include 2 longitudinal wires erected on each side of the phase wires band below the same, so that the horizontal separation from each split neutral wire to the adjacent phase wire is not less than two-thirds of the corresponding vertical separation from each split neutral wire to the lowest adjacent phase wire subject to the condition that the horizontal separation as referred to above is not less than 200 mm in any case. The cross lacings should be fixed between the two horizontal wires for the purpose of preventing a power wire from falling on a telephone or telegraph wire. The distance between the adjacent cross lacing should be 0·6 m. The distance between the telephone and telegraph wires and guard wires (split neutral or cage guards including earth wires) shall not be less than 0·6 m at any point.

14.2.1 When erecting low voltage power lines the conductors of the same should wherever possible, be arranged to cross over (not below) existing telephone or telegraph lines. For any special cases where it would not be convenient or economical to remove existing telephone or telegraph wires and erect them below the power wires, special guarding arrangements of suitable design must be provided to comply with requirements of the Chief Electrical Inspector of the concerned State.

14.3 Crossing of High Voltage Lines and Telecommunication Lines — For high voltage lines two longitudinal 18 to 27 mm² galvanized steel earth wires are to be provided with 6 mm diameter galvanized steel cross lacings. The longitudinal earth wires are to be located at a horizontal distance outside the conductors of not less than two-thirds of the vertical distance between the lowest adjacent high voltage conductor and the earth wire or 200 mm, whichever is the greater.

14.4 Where a telephone or telegraph line passes under high voltage aerial line on suspension type insulators, the protective arrangements should not be erected on the power lines but a separate guard should be located over the telephone or telegraph line, which should consist of two horizontal stranded solid galvanized steel conductors not less than 2 m above the telephone or telegraph line, with additional horizontal conductors at the sides where necessary to prevent a broken power conductor from coming into contact with the telegraph or telephone line conductor and to earth the broken power conductor for sufficient duration to ensure the power circuit being tripped out by the automatic protective devices. The crossing of the telephone or telegraph line (under the power line) should be as nearly as possible at right angles to the power line and adjacent to a power of other supporting structures of the latter.

14.5 Joint Use of Poles at Crossing Locations — In all constructions whether of power lines or telecommunication lines, the possibility (except in the case of unusual difficulty) of joint use of poles for crossings between telecommunication lines and power lines should be investigated and adopted. From the point of view of safety and structural considerations, the use of common pole to support both the power lines and telecommunication lines for the crossing is an advantageous proposition.

14.5.1 Adequate clearance shall be provided on the common pole to enable employees of either party to carry out the maintenance work on their respective lines. The clearance provided on the jointly used pole shall not be less than the values given below:

	Low and Medium Voltage Lines	*High Voltage up to and Including* 6·6 kV	*High Voltage Lines Above* 6·6 kV *and up to and including* 11 kV
	mm	mm	mm
Minimum vertical clearance between the bottom most power cross arm and fittings and the top most communication cross arms and fittings	1 220	1 380	1 980
Minimum vertical clearance between power and communication wires at the pole	1 380	1 525	2 130
Minimum vertical clearance between communication wires and earth wires on the power lines	1 070	1 070	1 070

NOTE 1 — Neutral wire on the power alignment shall be treated as power conductor for the purpose of clearance, except in the case of multiple-earthed neutral that is not carried on insulators.

NOTE 2 — When the voltage of the power line carried on the same pole as the telecommunication line is more than 3 kV (phase to earth), power contact protectors shall be installed at the crossings on all covers occupying the top bracket of the telecommunication line.

NOTE 3 — In order to minimize the maintenance work, common pole shall be used only for supporting the two crossing alignments. No apparatus or equipment such as switches, fuses and function boxes shall be mounted on such a pole and no line shall be teed-off from it. There is, however, no objection to installation on the pole of protectors or arresters for the protection of telecommunication wires.

15. GUARDING ARRANGEMENT FOR LINES CROSSING TROLLEY WIRES

15.1 Guarding arrangement for lines crossing trolley wires shall be in accordance with Rule 88 of Indian Electricity Rules, 1956.

16. JOINTING AND BINDING OF CONDUCTORS

16.1 Binding — The steel inforced aluminium conductors (ACSR) may be bound to the insulators with the use of flat aluminium tape as shown in Fig. 9.

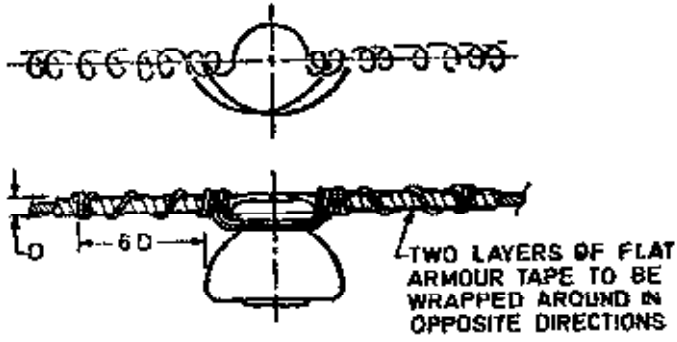

9A Top Groove Binding

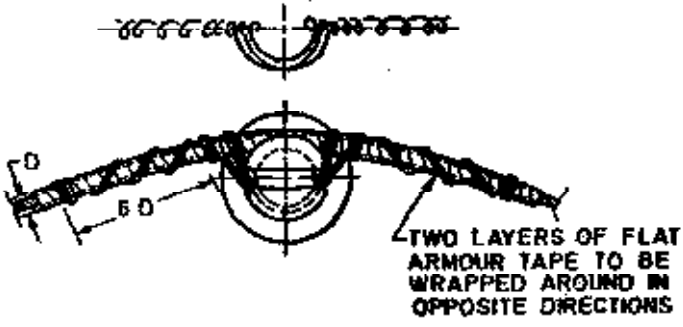

9B Side Groove Binding

FIG. 9 METHOD OF BINDING STEEL INFORCED ALUMINIUM CONDUCTORS (ACSR) USING FLAT ALUMINIUM TAPE

NOTE — Attention is drawn to the use of helically formed fittings for overhead lines for dead ending, connections, jointing, splicing, insulator tieing, etc. An Indian Standard on helically formed fittings for overhead lines is under preparation.

17. MAINTENANCE OF OVERHEAD LINES

17.0 General — The overhead lines should be inspected periodically for maintenance purposes to detect any faults which may lead to breakdown of electric supply and necessary repairs should be done immediately.

NOTE — The details of live line inspection shall be added at a later date.

17.1 Patrolling of Overhead Lines from the Ground — All overhead lines should be patrolled periodically at intervals not exceeding 3 months from the ground when the line is live. The petrols should write the inspection noted and pass them on to the repairmen for carrying out the necessary repairs. The main points to be noted while patrolling are as follows:

17.1.1 *Metal and Wood Poles* — Tilted poles, deformed cross arms and earthwise supports, settled or bulging soil around pole foundations, yielding of foundation, cracks or breaks in the poles above the ground level, missing nuts, and rust and cracks and missing nuts on anchor bolts.

17.1.2 *Conductors and Earth Wires* — Kite strings and other extraneous matters, excessive or loose sags, improper clearance and broken strands, loose or broken binding wires or tapes, clearance with other lines, etc.

17.1.3 *Insulators* — Broken porcelain, burnt and fused spots on the glaze, burning and tilting of insulator and fittings, and dirty insulator and rusty fittings.

17.1.4 *Earth Equipment* — Damaged or broken earthwire at the ground level, missing conductor, fixing stapples on supports, and missing clamps at the tops.

17.1.5 *Stays* — Loose and overtight stays.

17.1.6 *Trees* — The trees which have become dangerous for the lines and require felling or trimming.

17.1.7 Various works such as laying of roads, bridges, telephone lines, power lines being done near the overhead lines.

17.1.8 *Bird Nests* — Bird nests coming on the overhead lines.

17.1.9 *Jumpers* — Loose jumpers, jumpers jumbling on the poles, and overhead jumpers.

17.2 Inspection of Overhead Lines from Pole Tops — Many breakdowns including slipping of conductor due to loose clamps, cracks in the porcelain of insulator and defects on the suspension fittings can only be discovered or seen by going on top of every pole. This inspection should be carried

out by taking a shut-down of the line at least once a year and should be done in as little time as possible. Along with such inspection, repairs should also be carried out and replacement of cracked insulator, etc. be also made. Other points which cannot be examined from the ground, such as defective clamps, sleeves and connectors, missing bolts, washers, sign of overheating on clamps or connectors, loose earth wire and loose binding of conductor with insulators and lightning arrestors should be checked and repairs carried out.

17.3 Special Inspections — A special inspection of the overhead lines should be carried out after wind storm, heavy rains, thunder storms, etc. The purpose of such inspection is to detect any damage or breakage on the lines and to effect necessary repairs.

17.4 Emergency Inspection — When an overhead line trips on fault frequently it should be inspected to find out the nature of the fault such as loose sag and faults caused by birds and tree branches touching the line and to find out the amount of repairs involved with a view to avoid reoccurrence of such faults in future.

17.5 Maintenance Tests on Overhead Lines — In addition to the above mentioned inspection, overhead line should be given regular tests and checks as part of preventive maintenance. After 5 years of service, the wood poles stub poles and cross arms should be tested for a decay due to fungi.

The metal poles should be checked at random after every 5 years to detect any rust at the joints. The underground parts are also liable to corrosion and, therefore, should be inspected for effecting any repairs or replacement.

17.6 Measurement of Clearance of Overhead Lines — The conductor clearance should be checked periodically at least once in a year as they will be changed due to a variety of service conditions. The clearance may change due to unequal tension in adjacent spans, due to elongation with time, or due to displacement of poles after a repair or construction of new roads and earth fillings under or near the line.

17.7 Inspection of Insulators — The insulators of an overhead line are subject to mechanical and electrical stresses which shorten their life. Deterioration of insulators, is also caused by vibration temperature changes stressing mechanically beyond their design strength or over-voltages lead to the failure of the insulator. Damaged insulators are detected during periodical inspection. These should be replaced as soon as shut down of the line can be taken.

17.8 Inspection of Joints — The joints in conductors deteriorate in service with time and loose some of their conductivity due to short-circuits which

cause considerable heating and impairs the joint. Joints also deteriorate due to corrosion on the contact surfaces which causes redistribution of current through the joint.

Poor jointing and use of improper type of connection for the line conductors also cause the failure of joints. Poor electric contact or low mechanical strength in a joint may lead to overheating and breaking of a conductor. Defective joints should be detected and replaced during the periodical inspection. Any sparking of red hot joints should be repaired.

17.9 Inspection of Conductors and Overhead Earth Wires — In service, conductors and earth wires are subjected to static tensile stress due to conductor tension, static bending stresses in the conductor at and near the last point of contact of the conductor with the clamp, clamping stresses and alternating bending stresses due to conductor vibration. The condition of conductor may also be effected by constructional defects at the time stringing such as kinks, damaged strands, disturbed galvanized coating and excessive tension. All static stresses act as stress risers on which dynamic stresses due to conductor vibration are superimposed. The failure is caused by the combined action of static stresses and dynamic stresses. The significant contribution will be from dynamic stresses. As a result, some strands on the conductor as a whole may break specially at a place where it is secured on clamps on line supports, less frequently at the point of application of the vibration dampers, at discontinuities such as mid span joints. The conductors should therefore be inspected at the clamps.

17.10 Line Repairs — The overhead lines should be repaired periodically after each inspection and overhauled once a year. The purpose of routine repair is to maintain the line and the supporting structure at the necessary level of operational reliability. The purpose of overhaul is to fully restore a damage line and its supporting structure to the necessary strength. The repair work should be carried out of dead lines which should be fully cleared, opened and earthed. Before any repair is started, the workmen assigned the job of the repairs should be briefed on the works to the undertaken by them and the safety precautions to be observed. The actual repair work to be done on overhead lines is scheduled on the basis of the data obtained through inspection and maintenance checks. Any fault which is considered to result in break-down of supply should be attended to on emergency basis. The schedule of line repairs should include the following:

a) Replacement of damaged parts of wood poles and cross arms,

b) Replacement of defective poles as a whole,

c) Painting of metal poles and parts,

d) Replacement of damaged insulators and string,

e) Replacement of line fittings,

f) Cutting out and replacement of damaged conductor sections,

g) Sag adjustment on conductor and earth wires,

h) Repair of lightning arresters,

j) Tightening of clamps,

k) Replacement of overheated and weather-beaten jumpers,

m) Removing of kite strings and extraneous matters over the lines, and

n) Trimming of tree branches fouling or likely to foul in the near future with lines.

18. EARTHING

18.1 All metal poles including reinforced cement concrete and pre-stressed cement concrete poles shall be permanently and efficiently earthed. For this puspose a continuous earth wire shall be provided and securely fastened to each pole and connected with earth ordinarily at 3 points in every kilometre, the spacing between the points being as nearly equidistant as possible. Alternatively each pole, and metallic fitting attached thereto shall be efficiently earthed.

18.2 All stay wires of low and medium voltage lines other than those which are connected with earth by means of a continuous earth wire (*see* **18.1**) shall have an insulator inserted at a height of not less than 3 m from the ground.

18.3 The cross-sectional area of the earth conductor shall not be less than 16 mm^2 if of copper, and 25 mm^2 if of galvanized iron or steel.

18.4 Reference is also invited to 18 of IS : 3043-1966*.

---

*Code of practice for earthing.

BUREAU OF INDIAN STANDARDS

Headquarters:
Manak Bhavan, 9 Bahadur Shah Zafar Marg, NEW DELHI 110002
Telephones : 331 01 31, 331 13 75 — Telegrams : Manaksanstha (Common to all offices)

Regional Offices:		*Telephones*
Central	: Manak Bhavan, 9 Bahadur Shah Zafar Marg, NEW DELHI-110002	331 01 31 331 13 75
*Eastern	: 1/14 C.I.T. Scheme VII M, V. I. P. Road, Maniktola, CALCUTTA 700054	36 24 99
Northern	: SCO 445-446, Sector 35-C, CHANDIGARH 160036	2 18 43 3 16 41
Southern	: C. I. T. Campus, MADRAS 600113	41 24 42 41 25 19 41 29 16
†Western	: Manakalaya, E9 MIDC, Marol, Andheri (East), BOMBAY 400093	6 32 92 95
Branch Offices:		
'Pushpak' Nurmohamed Shaikh Marg, Khanpur, AHMEDABAD 380001		2 63 48 2 63 49
‡Peenya Industrial Area, 1st Stage, Bangalore Tumkur Road BANGALORE 560058		38 49 55 38 49 56
Gangotri Complex, 5th Floor, Bhadbhada Road, T. T. Nagar, BHOPAL 462003		6 67 16
Plot No. 82/83, Lewis Road, BHUBANESHWAR 751002		5 36 27
53/5, Ward No. 29, R. G. Barua Road, 5th Byelane, GUWAHATI 781003		3 31 77
5-8-56C L. N. Gupta Marg (Nampally Station Road), HYDERABAD 500001		23 10 83
R14 Yudhister Marg, C Scheme, JAIPUR 302005		6 34 71 6 98 32
117/418 B Sarvodaya Nagar, KANPUR 208005		21 68 76 21 82 92
Patliputra Industrial Estate, PATNA 800013		6 23 05
T C. No. 14/1421, University P.O., Palayam TRIVANDRUM 695035		6 21 04 6 21 17
Inspection Office (With Sale Point) :		
Pushpanjali, 1st Floor, 205-A West High Court Road, Shankar Nagar Square, NAGPUR 440010		2 51 71
Institution of Engineers (India) Building, 1332 Shivaji Nagar, PUNE 411005		5 24 35

*Sales Office in Calcutta is at 5 Chowringhee Approach, P.O. Princep Street, Calcutta 700072 — 27 68 00

†Sales Office in Bombay is at Novelty Chambers, Grant Road, Bombay 400007 — 89 65 28

‡Sales Office in Bangalore is at Unity Building, Narasimharaja Square, Bangalore 560002 — 22 36 71

Printed at Simco Printing Press, Delhi, India